Ampheia™ - LS Series

Ultra-Low Noise | Single Frequency | Fiber Laser Systems

Applications

Optical Tweezers
Atom Trapping
Raman Spectroscopy and Microscopy
Holography
Semiconductor Inspection and Defect Detection
Particle and Flow Analysis

- Up to 50 W at 1064 nm and up to 5 W at 532 nm
- Continuous wave, single-frequency emission
- Ultra-low relative intensity noise and perfect beam quality
- Single-stage fiber amplifier with integrated seed laser
- Optical signal to noise ratio (OSNR> 70 dB)
- Robust and maintenance free

Typical Relative Intensity Noise (RIN)

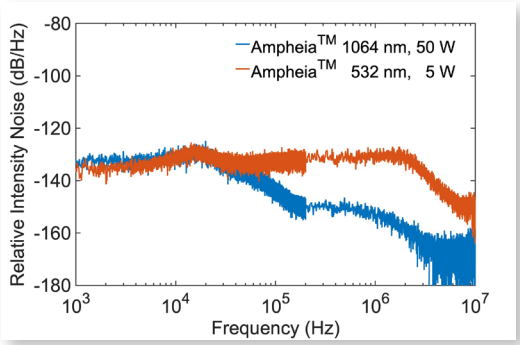

The Ampheia™ - LS Series is a family of high-power fiber laser systems, delivering ultra-low relative intensity noise (RIN) and single-frequency operation with up to 50 W of power at 1064 nm and 5 W at 532 nm in a perfect beam.

Ampheia™ - LS Series is delivered with an integrated seed laser and beam delivery head. A complete laser system that is affordable, with outstanding laser performance.

Based on established manufacturing processes, the Ampheia™ - LS Series guarantes a high level of reliability, ideal for stand-alone use in research labs or integration into a commercial system. The Ampheia™ - LS Series addresses applications ranging from from atom trapping and optical twezeers in quantum applications to coherent laser pumping, particle analysis, and semiconductor inspection.

Typical TEMoo Beam Profile

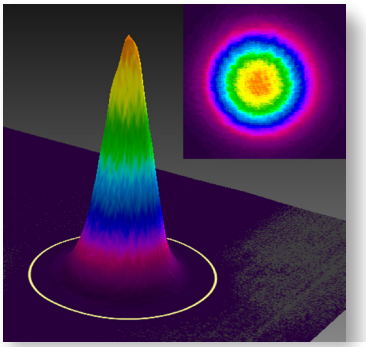

HÜBNER Photonics

Ampheia™ - LS Series

Optical Specifications

		Ampheia™ - LS			
Wavelength in air		532.1 ± 0.3 nm	1064.2 ± 0.6 nm		
Available Power Levels		5 W	20 W	40 W	50 W
Output power range		1 % to 100 %	5 % to 100 %	2.5 % to 100 %	2 % to 100 %
Spectral linewidth (FWHM, 1 ms)		< 100 kHz	< 50 kHz		
Optical signal to noise ratio (OSNR)		> 70 dB			
Wavelength stability (±2°C and 8hrs)		< 1 pm			
Power stability (±2°C and 8hrs)		< 1.0 %	< 0.5 %		
Noise, 100 Hz - 10 MHz (rms)		< 0.1 %	< 0.05 %		
Relative intensity noise (RIN)	1 kHz - 100 kHz	< -125 dB/Hz	< - 130 dB/Hz		
	100 kHz - 1 MHz	< -130 dB/Hz	< - 140 dB/Hz		
Beam diameter at aperture*		1.0 ± 0.2 mm			
Beam symmetry at aperture		> 0.90:1			
Spatial mode (TEM_{00})		M^2 < 1.05			
Beam divergence (full angle)		< 0.9 mrad	< 1.7 mrad		
Polarization extinction ratio (linear, vertical)		> 1000:1 [> 30 dB]			
Beam position accuracy (mm)		< 0.5			
Beam angle accuracy (mrad)		< 5			
Delivery fiber cable length		1.0 m			

* The beam diameter may vary with output power and can only be guaranteed at nominal power.

Operational Enviromental Specifications

Standard power supply	36 VDC, 10 A
Voltage acceptance	36 V
System power consumption	300 W
Maximum delivery head heat dissipation	5 W
Ambient temperature, operation	18 - 30 °C
Maximum baseplate temperature	40 °C
Laser head heat sink thermal impedance (at max ambient temperature)	< 2 K/W
Ambient temperature, storage	-10 -> +60 °C
Intended use environment	Laboratory (indoor), pollution degree 2
Humidity	0- 60 % RH non-condensing
Altitude	0-2000 m
Ambient Air pressure	800 - 1050 mbar
Overvoltage category	II

Model Number

A1-WWWW-XXXXX-PPPW-2000

- WWWW: Wavelength
- XXXXX: Included modules
- PPPW: Power
- 2000: Configuration:
  - 1000 = CE / CDRH
  - 2000 = OEM
  - XXXXX = Customization

WARNING VISIBLE AND INVISIBLE LASER RADIATION!

Avoid eye or skin exposure to direct or scattered radiation.
Class 4 Laser Product
Classified per IEC 60825-1:2014

Wvl (nm)	Max.Pwr (W)
532	20
1064	200

Communication Interface

Communication	USB and RS-232
Standard Baudrate	115200

Ampheia™ - LS Series

Mechanical Specifications

	Ampheia™ - LS	
	532 nm	**1064 nm**
Fiber amplifier chassis weight	19 kg (41 lbs.)	18 kg (39 lbs.)
Fiber amplifier chassis dimensions (LxWxH)	470.5 x 423 x 133 mm (18.52 x 16.65 x 5.24 in.)	
Delivery head weight	0.62 kg (1.37 lbs.)	0.76 kg (1.68 lbs.)
Delivery head dimensions (LxWxH)	155 x 55 x 45 mm (6.10x2.17x0.87 in.)	

Ampheia™ - LS 1064 nm - Fiber amplifier chassis dimensions:

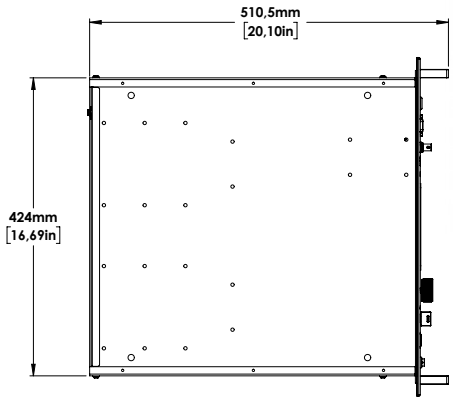

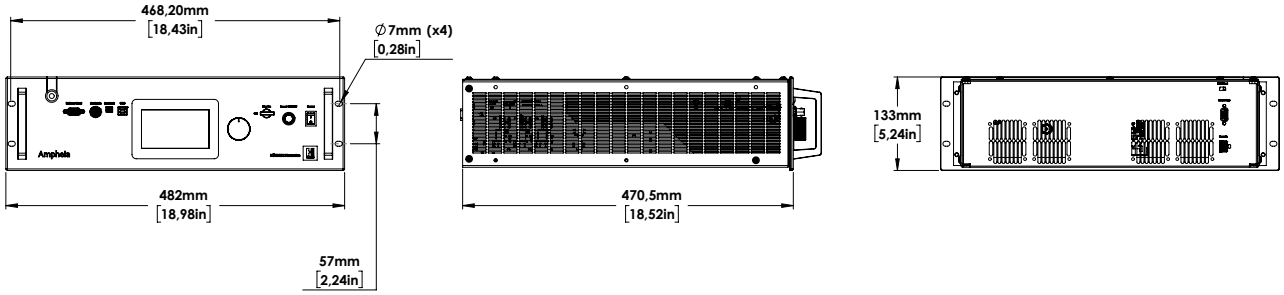

Ampheia™ - LS 532 nm - Fiber amplifier chassis dimensions:

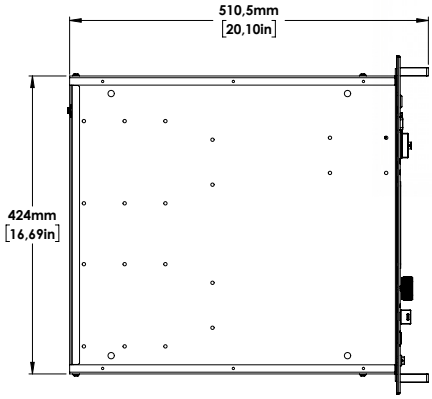

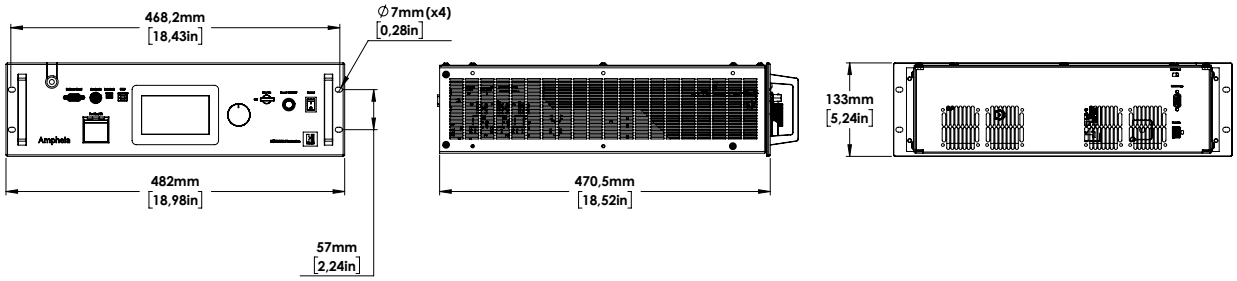

Ampheia™ - LS Series

Mechanical Specifications

Ampheia™ - LS 1064 nm : Delivery head dimensions

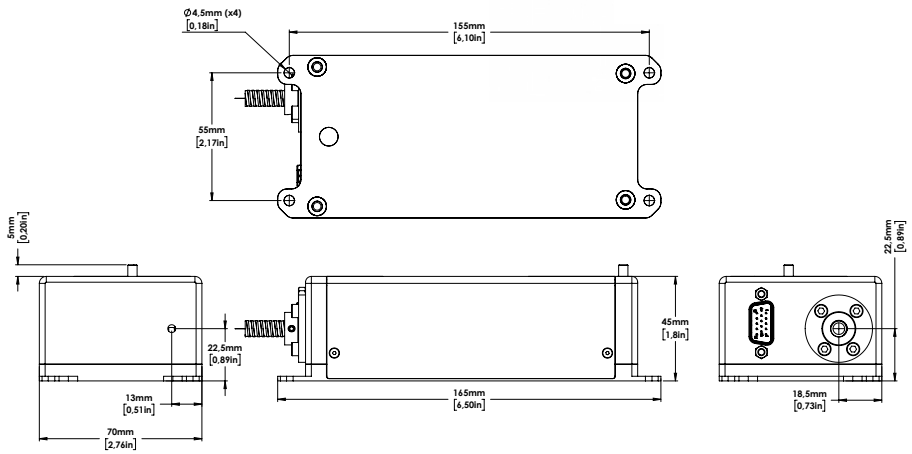

Ampheia™ - LS 532 nm : Delivery head dimensions

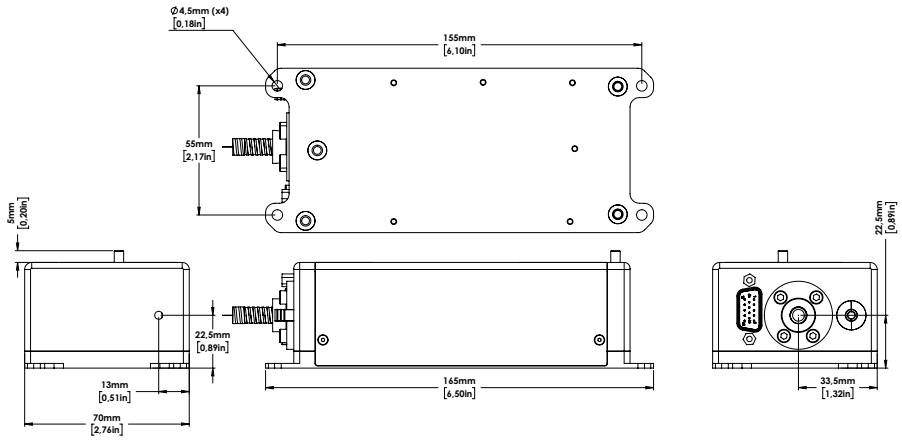

Find more info
Ampheia™ -LS Series

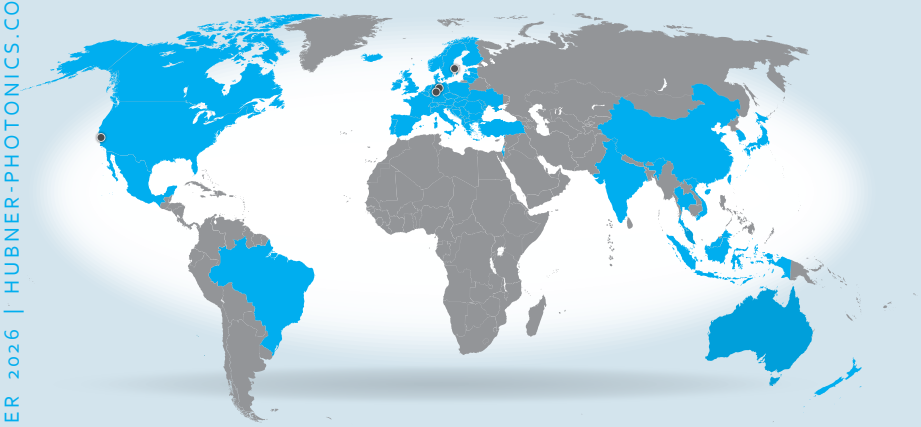

Our Locations

Cobolt AB , a part of HÜBNER Photonics
(Sales in Norway, Sweden, Finland and Denmark)
Solna, Sweden
Phone: +46 8 545 912 30
Fax: +46 8 545 912 31
E-mail: info.se@hubner-photonics.com

HÜBNER Photonics GmbH
(Sales in Germany, Switzerland and Austria)
Kassel, Germany
Phone: +49 561 994 060-0
Fax: +49 561 994 060-13
E-mail: info.de@hubner-photonics.com

HÜBNER Photonics Inc.
(Sales in USA, Canada and Mexico)
San Jose, California, USA
Phone: +1 (408) 708 4351
Fax: +1 (408) 490 2774
E-mail: info.usa@hubner-photonics.com

HA Photonics Pty Ltd
(Sales in UK and Ireland)
London
United Kingdom
Phone: +44 7359 440 871
E-mail: info.uk@hubner-photonics.com

VALO Innovations, a part of HÜBNER Photonics
(VALO Sales and Service)
Hannover, Germany
Phone: +49 511 260 390 70
E-mail: info.valo@hubner-photonics.com

Find local sales representatives at hubner-photonics.com

D0999-F | SEPTEMBER 2026 | HUBNER-PHOTONICS.COM